Ƕ ǐ

w̄ ȁ ą ʌ ↕

1 ȁ ʌ ↕ ' ľ ǫ̈ ˘ U ą Ł

2 ȁ ' Í Í ˜ ʒ ⊢ Í Í ̤ □

Í Í ᵒᵒ Í Í

3 ȁ ⅄ ʒ ⊢ '

ʒ ⊢ ṗ		
		ɥ' ˝Ḥ ǐ ɣ̣ ̀ ̀
	̤ □	ɥ' ˝Ḥ ǐ ɣ̣ ̀ ̀
		ɥ' ˝Ḥ ǐ ɣ̣ ̀ ̀
˥	̤ □	ɥ' ˝Ḥ ǐ ɣ̣ ̀ ̀
ȁ ˥ ǐ ̤		ɲ' ˝Ḥ ǐ ɣ̣ ̀ ̀
ƀ ʒ ⊢	̤ □	ɥ' ˝Ḥ ǐ ɣ̣ ̀ ̀
ᵒᵒ ˜ ˆ ȁ ȁ ᵒᵒ ˜	ᵒᵒ	

Ҥ ȁ Ɣ̆ ₮ Ҥ ї̆

ˆ ѿ˜

1 ȁ Ҥ

ŵ ȁ ˧ ч ї́ Ð˘

‰ ȳ’

Ŷ Ţ ѣ ˘ ∟ ї̆ غ ї̆ ˆ ضي

ϒ ṕ ⅂ ą ’

ŷ ⁊ ˧ β غ ˧ β ˧ β ’

Ÿ ѣ ϒ ´ ₮ ’

Ź غج ∟ ȁ شخ غ ˘ ϒ ч Ḡ ˘

ضي غ ˘ ضي ϒ Ӣ Ţ Ạ ₮ :

专用设备购置

专用设备购置【试制设备费】

专用设备购置【购置设备费】

专用设备购置【设备改造与租赁费】

Ғ ȍ ∟ Ô Í ч ∟ ȳ ’

Ғ ȍ Ô Í ’

Ғ ȍ ѣ Ô Í ч ȳ

Â

专用材料费

专用材料费【设备改造与租赁费】

专用材料费【试制设备费】

专用材料费【原材料/试剂/药品购置费】

Ғ ȍ ѣ Ô Í ч ѣ ȳ

’

Ғ ȍ ∟ Ô Í ч ∟ ȳ ’

Ғ ȍ ⅃ / ⅂ / ج Ô Í ⅃ / ⅂ / ج

Â

2 à ĭ

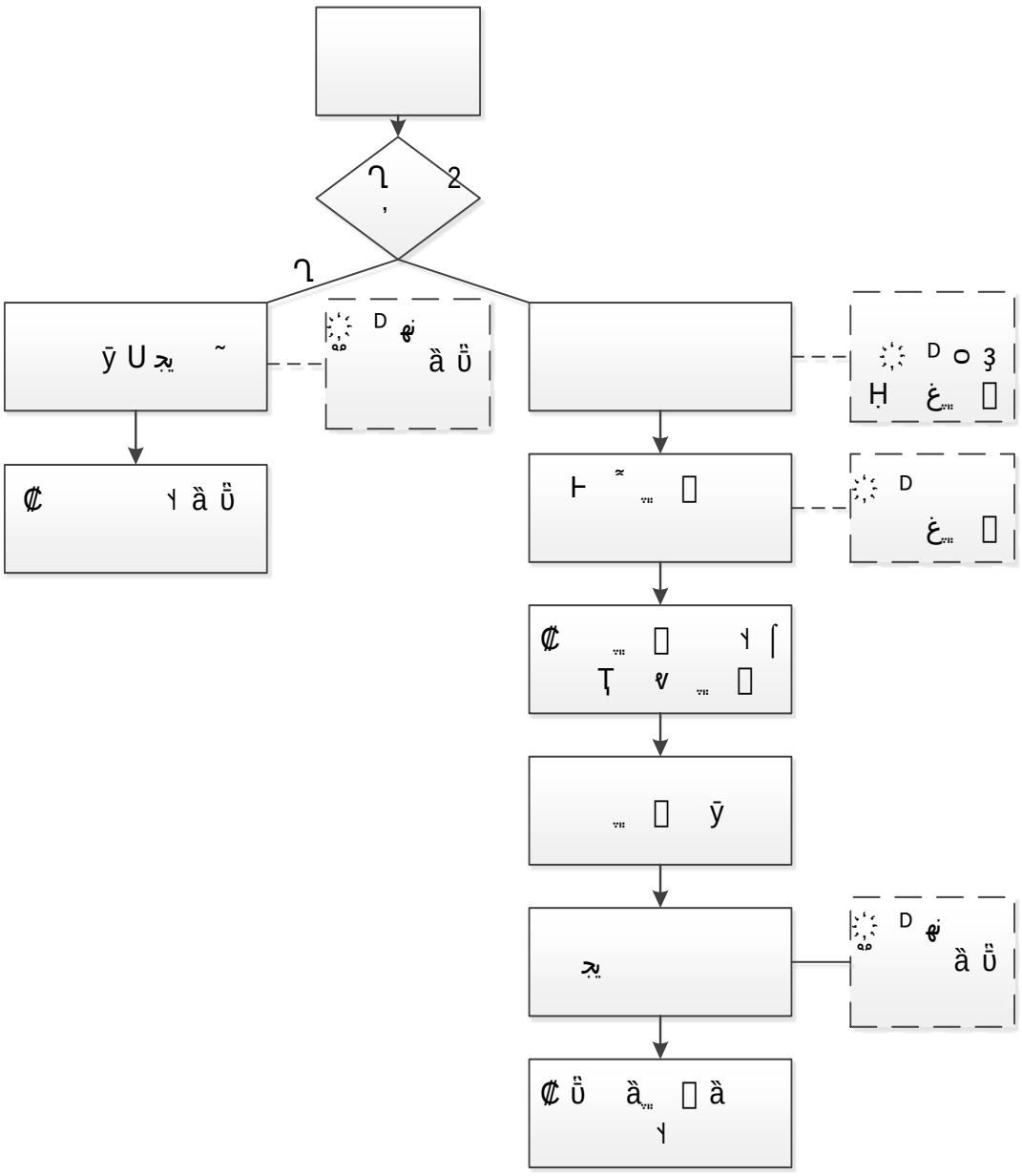

ˆ Ƕ˜

1 ȁ Ƕ

ŵ ǖ ȁ ǐ ɿ ŋ˘ ɿ ˜ 2 ’

ŶW`E ʌ ⇕ 7 ضي ˘ 7 ضي ↓

’ Ǔ ˜ ضي Â

2 ȁ ȳ غ ʟ

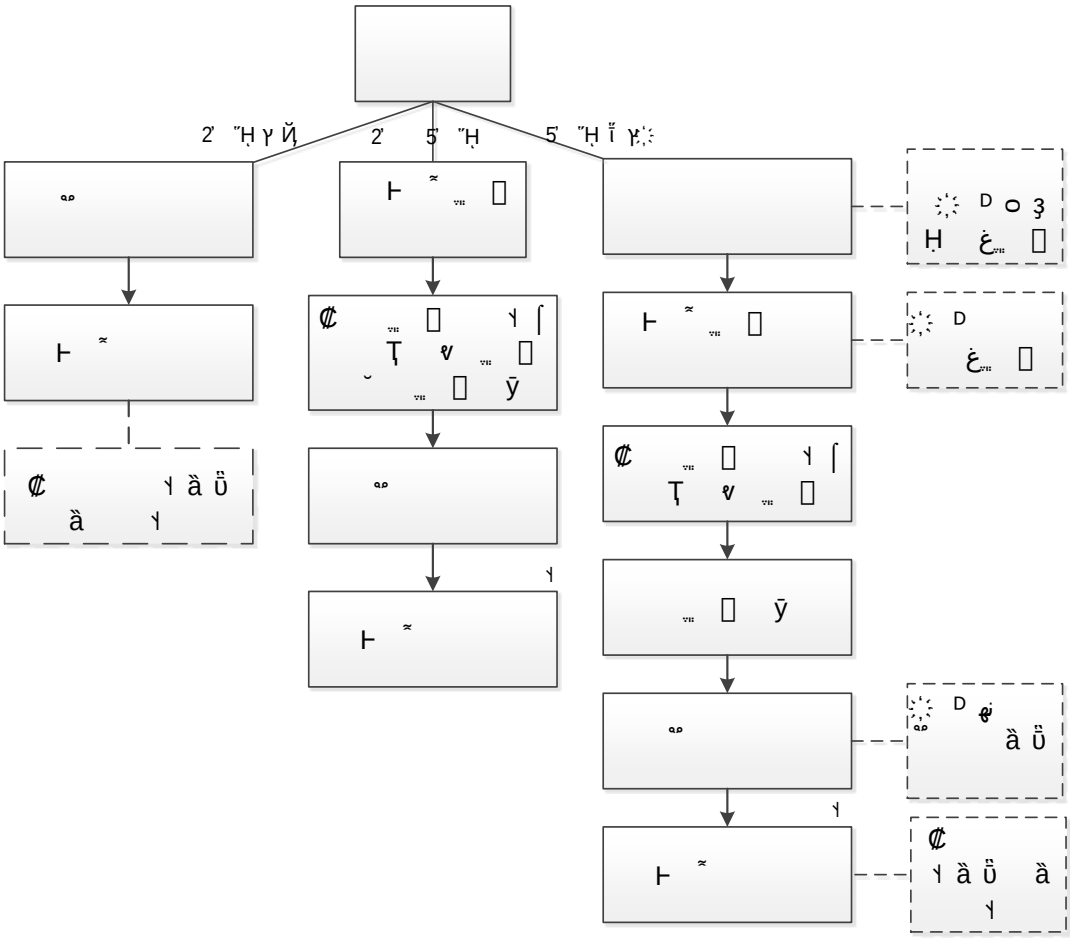

ˆ ⸗ ˜ /ψ /ﻳﺠ ﻳﺠ ƀ´

1 ȁ

ˆ 1˜ ⸗ ⸗ ﻛ ﻛ

ŵ ﻻ

Ḥ Ţ ľ Ͱ ˜ Ľ Ώ’

Ŷ ĕ ﻳﻠ ﻳﻠ ´ ï ǖ ’

ŷ ’ ⸗ ï ﻳﻠ ’ й˘

ˆ 2˜ Ƕ

ŵ ⸗ ą ˋE Ͱ ﻻ˘ ƒ Ƅ ʒ Ṣ ˘ ﻋﺠ ﻻ ﻋﺠ ą ˋE Ͱ ﻻ˘ ⸗

ﻋ ’˘ ﻋ ’

Ŷ ⸗ ﻋ 2 ą ǖ δ ǖ ´ Âδ ´

‰ ê ʒ W ȉ ǖ Ȑ 2019 ȑ 78˜ ˜ Ţ ˜

‰ ˘ ﻟ δ ǖ Â

ŷ h ⸗ ▯ δ ﻋ ﻳ ˘ Ƅ˜

ﻻ ˘ ₵ δ ﻋ ǖ ǖ ρ ↑˘ Ƅ ʼP ǖ ρ́´

’ h ˜ γ ﻻ Ƅ ˜ ˜ ρ́

˘ ǖ O Ώ ľ ʒ Ľ˘ ﻟ ˘ Ώ ľ

ʒ Ľ U ﻳ ﻻ β ˋE ǖ F ’

Ÿ ⸗ Ƅ ˘ ⸗ ﻋ ⸗ ï ’ ˘ ﻻ β

ˆ ˜ ﻋ ˜ U˘ Ͱ ₵ Â ⸗

Ƅ ƒ ﻟ ˘ Ƅ ǖ ⸗ ↑’

Ź Ƅ ȳ ﻳ ﻻ ȁ ˋE´ ﻻ ´ ǖ ’

ˆ 3˜ ﻳﺠ ρ́´ ﻋ

ŵ ﻻ

Ḥ ľ Ͱ ˜ Ľ Ώ’

Ŷ ȁ´ ǖ ’

ŷ ˜ ’

2 ầ ψ

ˆ 1˜ Ƕ

ŵ ϻ №ɵWψ غ ₮ ǟ ɤ ψ ˘ ₮ ǟ ɤ ψ ضي Ţ ’

Ŷ Ь ضي ϻ ≢ يج ⊢ ϻ ɵWψ ˘ ê ˜ ɢ Ƕ

ά ˜ ∫ O ϻ ψ Ì ˘ ά ˜ ϖ Ь ∫ ŋ̃ ˙ ϻ ầ

ŋ̃ ầ ɲ ˜ ầ ầ ầ ầЖ ϻ ầ ầ ầ

ầ ầ ầ ˆ ˜ ầ Ɛ ầ ầ ˆ ˜ ầ

˙ I ɯ ầ Ж ˙ ầ ầ ǐ ầ ϻ 21 ɷ O ϻ

9 ψ ˘ 9 ψ ϻ مخ ϒ O ϻ r 7/8 ϻ ضر

مخ ϻ ‰ Â

ˆ 2˜ ψ ˪ ǐ

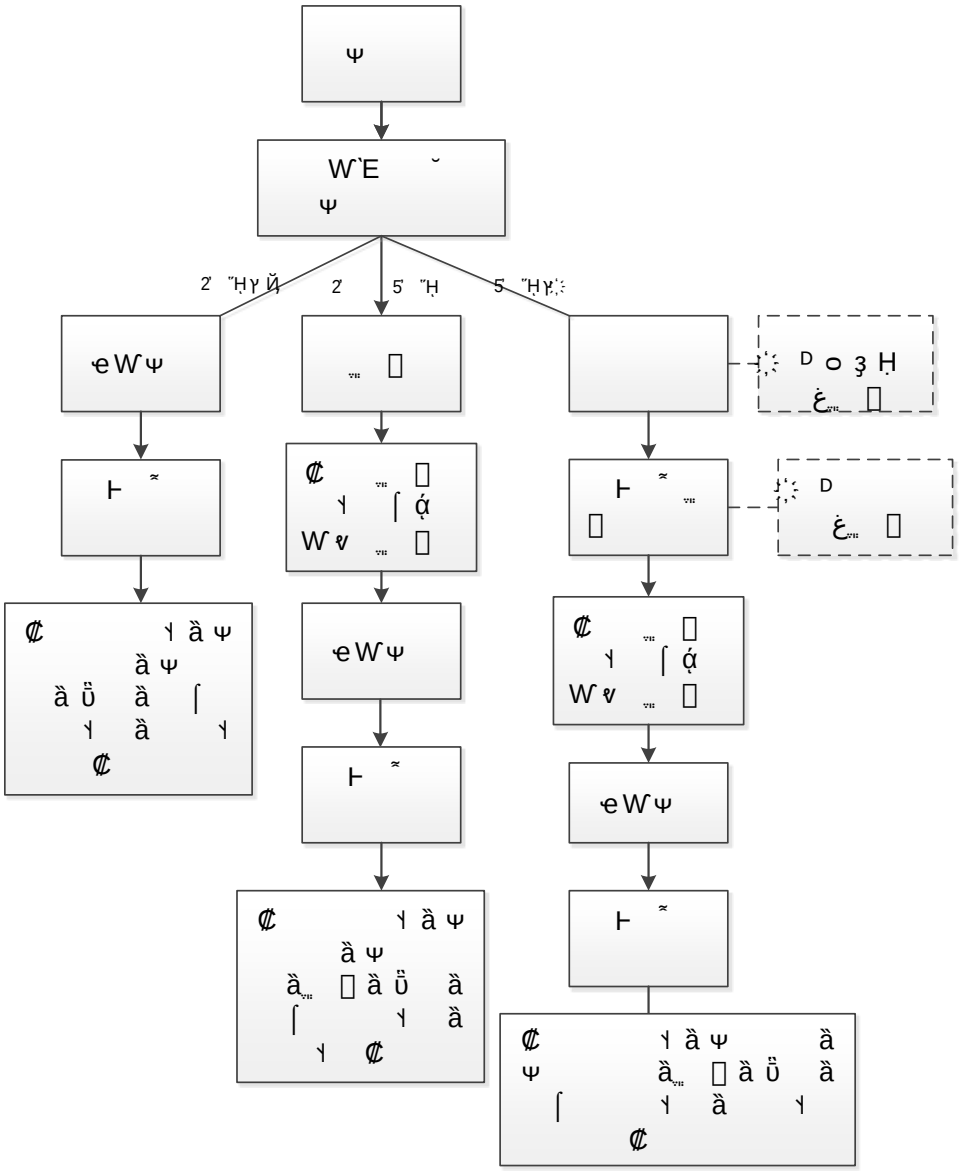

3 ȁ ɷ ɷ ƀ ƀ´

ˆ 1) Ƕ

ŵ ǐ ⌠ ɷ ǟ ɤ ˘ ʟ δ ˘ ↕ ⁷ ’

Ŷ ₮ ɷˆ ˜ ⁷ 2 ǖ ’

ŷ ₮ ɷ ȳ ʎ ⇕ ǔ ’

Ÿ ɷ̀ ʿE ₮ ɷ ˜ Ɯ ’

Ź ɷ̀ ʿE ₮ ɷ ⌂ ɷ ˘ ɷ ₮ ɷ ǟ ɤ ɷ Ψ ȁ ɷ ´

˩ ʟ ˩ Â

ˆ 2˜ ɷ

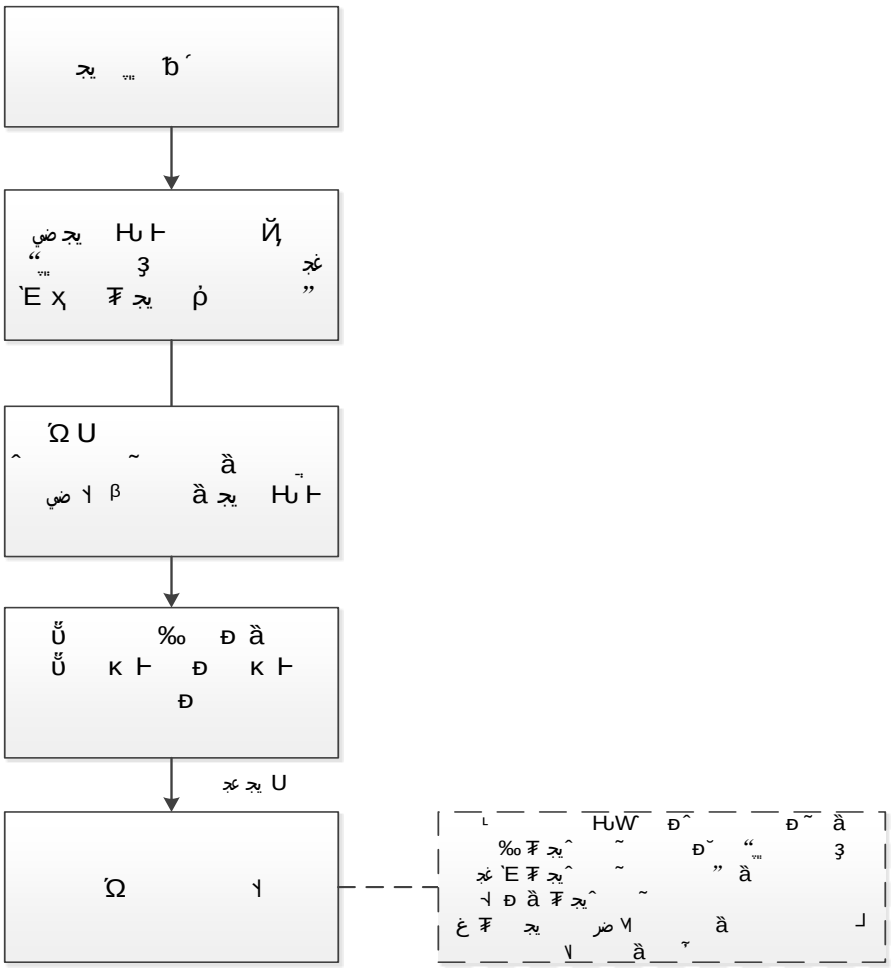

ˆ 3˜ ą ɷ̀ ʿE ₮ ɷˆ ɷ ǟ ǐ γ Ǻ˜ ˘ ʟ Ǻ

ʿ

ŵ Ƕ Ɯ Đˆ Đ˜’

Ŷ ‰ ₮ ɷˆ ˜ Đ’

ŷ ľ ̤ ʒ ɛ̀ E ₮ ɛ̂ ˜ Ľ

ɛ ضي Hu ⊢ Ǧ Ŕ ᛋ Ǧ ’

Ÿ ᛋ Đ’

Ź ₮ ɛ̂ ˜ غ ₮ ɛ ضر ᛋ Í ضي Ţ ɛ

Ǧ ’

ź ┘ ᛋ ’

Ż ˜ ’

ż ₮ ɛ ᛋ’

Ḥ ľ ⊢ ˜ Ľ

Ž ɛ̀ E ´ ɛ Â

ɛ ضي Hu ⊢ W

ᛋ ₡ Ţ ṗ ȁ ȁ ȁ ˘ W ̤

Â

ˆ 4˜ w ̤ 2 ɛ̀ ₮ ɛ̂ ˜˜ ˜ ɣ ɛ̀

˘ ʟ ‘

ŵ ľ ̤ ʒ ɛ̀ E ₮ ɛ̂ ˜ Ľ

ɛ ضي Hu ⊢ Ǧ Ŕ ᛋ Ǧ

Ŷ ľ ₮ ɛ̂ ˜ ’ Ľ

ŷ ᛋ Đ’

Ÿ ₮ ɛ̂ ˜ غ ₮ ɛ ˆ ضر ᛋ˜ Í ضي Ţ ɛ

Ǧ ’

Ź ┘ ᛋ ˜ ’

ź ₮ ɛ ᛋ’

Ḥ ľ ⊢ ˜ Ľ ’

ᛋ ₡ Ţ ṗ ȁ ȁ ȁ ˘ W ̤

Â

ˆ 5˜ ǐ ɛ ɛ ȁ ɛ ˘ ą

ɛ ̤ ƀ´ κ ⊢ ₮ ɛ̂ ˜˜ Hu ῷ ̤ Hu غ ɛ Hu ⊢

U˘ W Â

ˆ 6˜ F ˅ ˪'

ŵ ₱'

Ŷ '

ŷ ˅ '

Ÿ ˻ '

Ź´ ˜ ˩ ˥ '

ˆ˻ ₡ Ţ ȯ ȁ ȁ ȁ ˘ W˻

Â

ź ₮ ˻ ˥'

Ḥ ľ ⊢ ˜ L

ˆ ضه˜ ₮ / /Ḥ D / ᵃᵒ Ƕ⊢

1 ȁ Ƕ

ŵ Ƀ غ ’

Ŷ Ƀ F ≠ ˘ 7 ᵃᵒ F ≠ ȁ ๆ

ȁ غ F ₮ ’

ŷ يج غ ـ Ƀ ₮ ’

يج U ↑ ȁ Ţ ˥ ˘ يج ï ɪ

≢ ₮ Ӟ Ƀ ↓ ₮ Â

2 ȁ ȳ غ ȁ يج й غ ᴸ

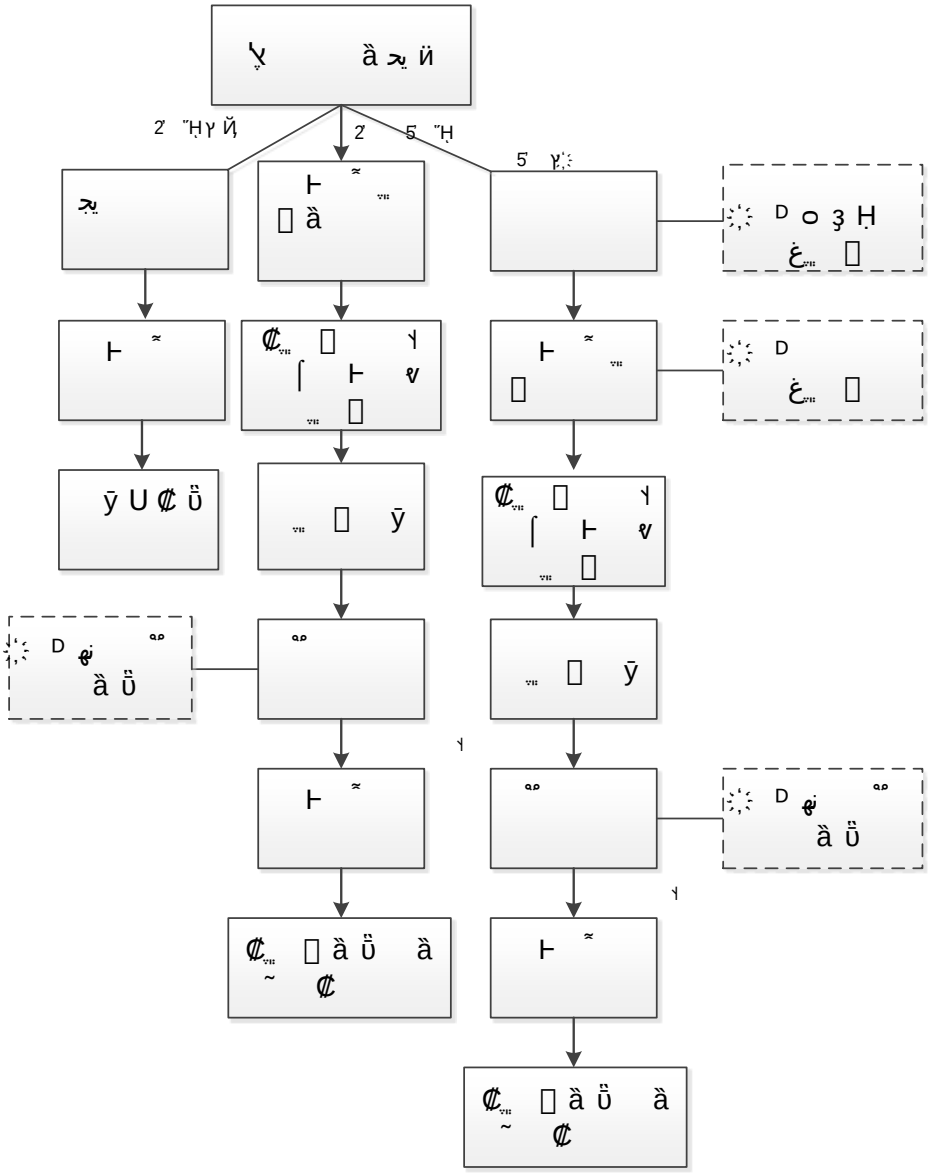

4 à Ғ Ð Ė

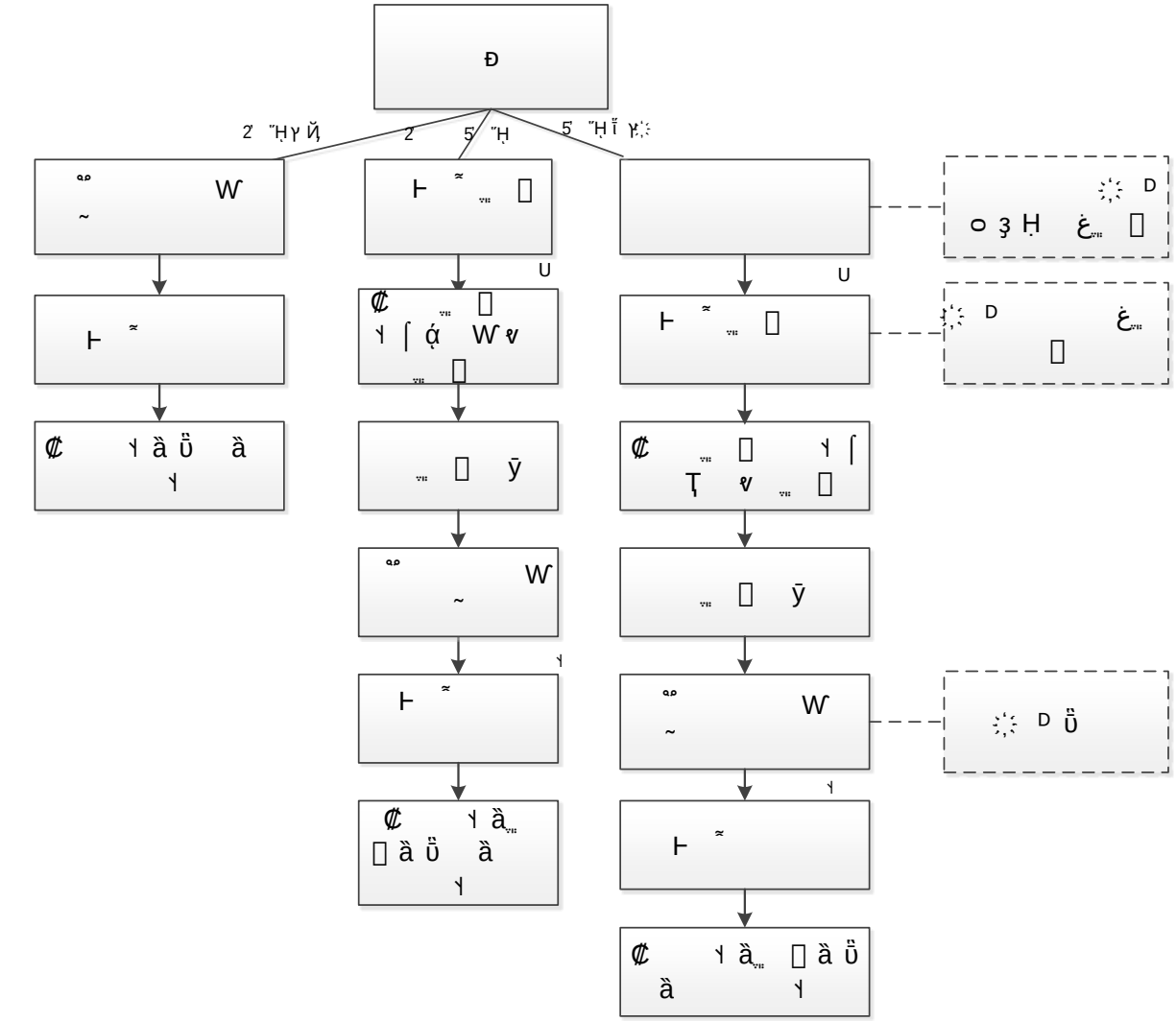

5 à Ғ ≠ غ ᒪ ᒃ

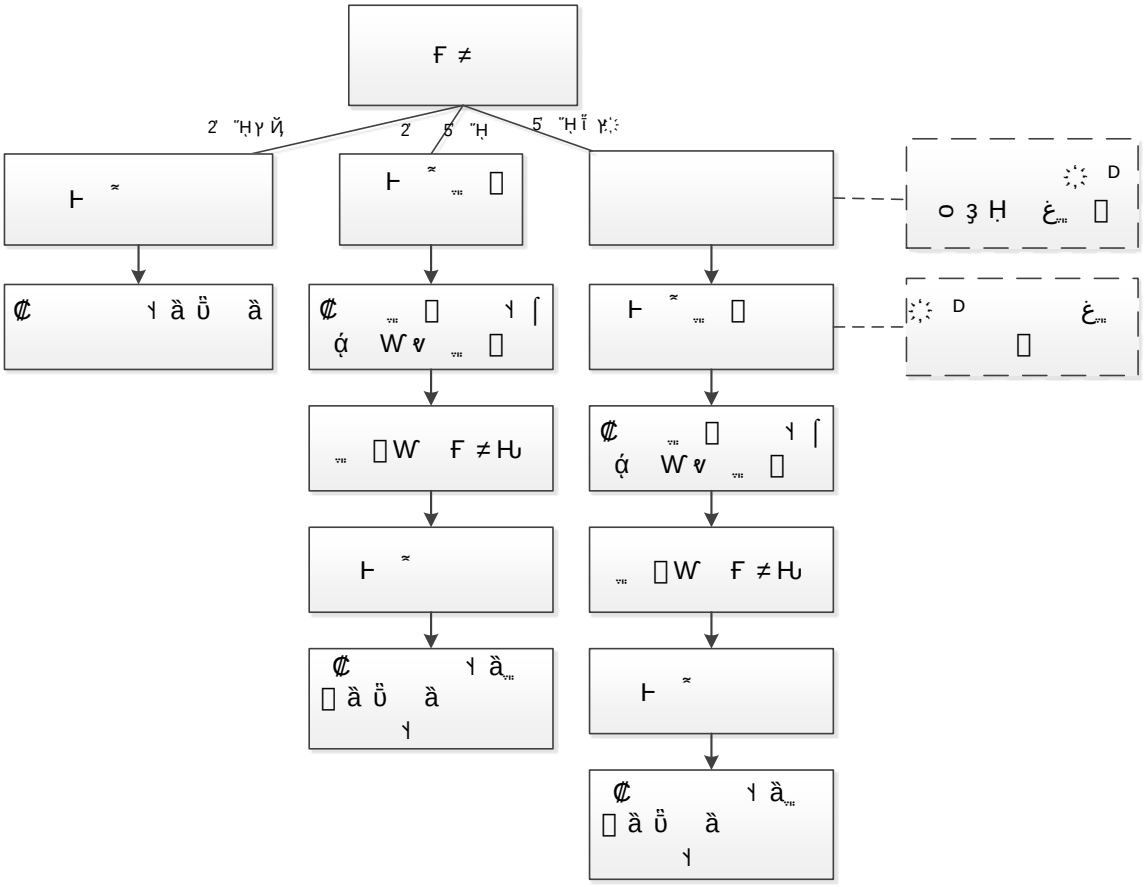

ˆ Ɲ˜ ˈ Ⱶ ɨ Ғ ٣

1 ȁ Ԧ

ŵ ˈ ̧ ̣ 2 ǖ ʌ ⁑ ˇ ǖ ˇ ⁑ Ώ ǖ ̣ 2

O ȁ м ˜ ˆ ρ̇ ˜ ˜ ˜ ȁ ˇ ȁ ȁ ƀ ˈ β ȁ ǖ

ɨ ƀ ’ ɨ χ ˈ ˇ ˇ ˪

м ˈ ȁ ȁ ’

Ŷ ̣ 2 ˇ ѡ̈ ̣ Ԧ ‰ U ˇ ˜ υ ˜ ̣ 2

’

ŷ ˈ β ضي ضي ̣ 2 ƀ ǖ ˈ Ⱶ ˇ 2 ɨ ̣ 2 ƀ ǖ Ғ

٣ ’

Ÿ ˈ Ⱶ ɨ Ғ ٣ ʌ ⁑ ̣ ̣ ǖ ɷ ̣ ˇ ƀ ˈ β ’

Ź Ώ Ғ ٣ ̣ Ғ ̣ ’

ź ƀ γ ˈ Ⱶ ǖ Ғ ٣ ’

Ż ƀ ‰ ǖ Ғ ٣ ˇ ‖ ˇ ̣ ˪ Ғ ٣

‰ Й ˈ

٣ Ғ	ψ	ˈ	ƀ ԧ ˆ Ƨ ԧ ˜	ԧ
ȁ ŋ ̣ O Ғ	ψ ȁ ش Ɵ	1350-2160 ˝Ḥ ̣ ˆ U˜	2250-3600 ˝Ḥ ̣ ˆ U˜	ѿ ȁ Ԧ ˈ 2250-3600 ˝Ḥ ̣ ˆ U˜ ’ ̂ ̂ ̂ ǐ γ U ˈ 1125-1800 ˝Ḥ ̣ ˆ U˜
		ˇ ⁑ ‰ 20-50% Â		
Ғ ̣ 2	ψ ȁ ش Ɵ	900-1440 ˝Ḥ ̣ ˆ U˜	1500-2400 ˝Ḥ ̣ ˆ U˜	ѿ ȁ Ԧ ˈ 1500-2400 ˝Ḥ ̣ ˆ U˜ ’ ̂ ̂ ̂ ǐ γ U ˈ 750-1200 ˝Ḥ ̣ ˆ U˜
		ˇ ⁑ ‰ 20-50% Â		

ï ɾ Ғ ʒ ̣ 2	ψ ȁ ش Ɵ	540-900 ˝Ḥ ̣ ˆ U˜	900-1500 ˝Ḥ̣ ̣ ˆ U˜	ɯ̄ ȁ ʜ ' 900-1500 ˝Ḥ̣ ̣ ˆ U˜ ' ˆˆˆ ĭ ɣ U ' 450-750 ˝Ḥ̣ ̣ ˆ U˜
		˘ ⁘ ‰ 20-50% Â		

2 ȁ

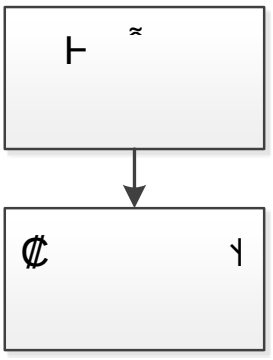

ˆ Ɛ˜ ˥ ˆ Ƈ˛ ƀ ɛ ʒ ⊢ ˜

1 ȁ ˛ ɤ

ˆ 1˜ Ʉ

ŵ ˛ ɤ ⊓ ᾠ Ð ˘ ˥ β ˘

№ Ţ ’

Ŷ ∫ ˛ U˘ ɚ Ḥ

˘ ˜ Ḥ

˛ ƀ ɥ ɯ Â

ˆ 2˜ ɤ

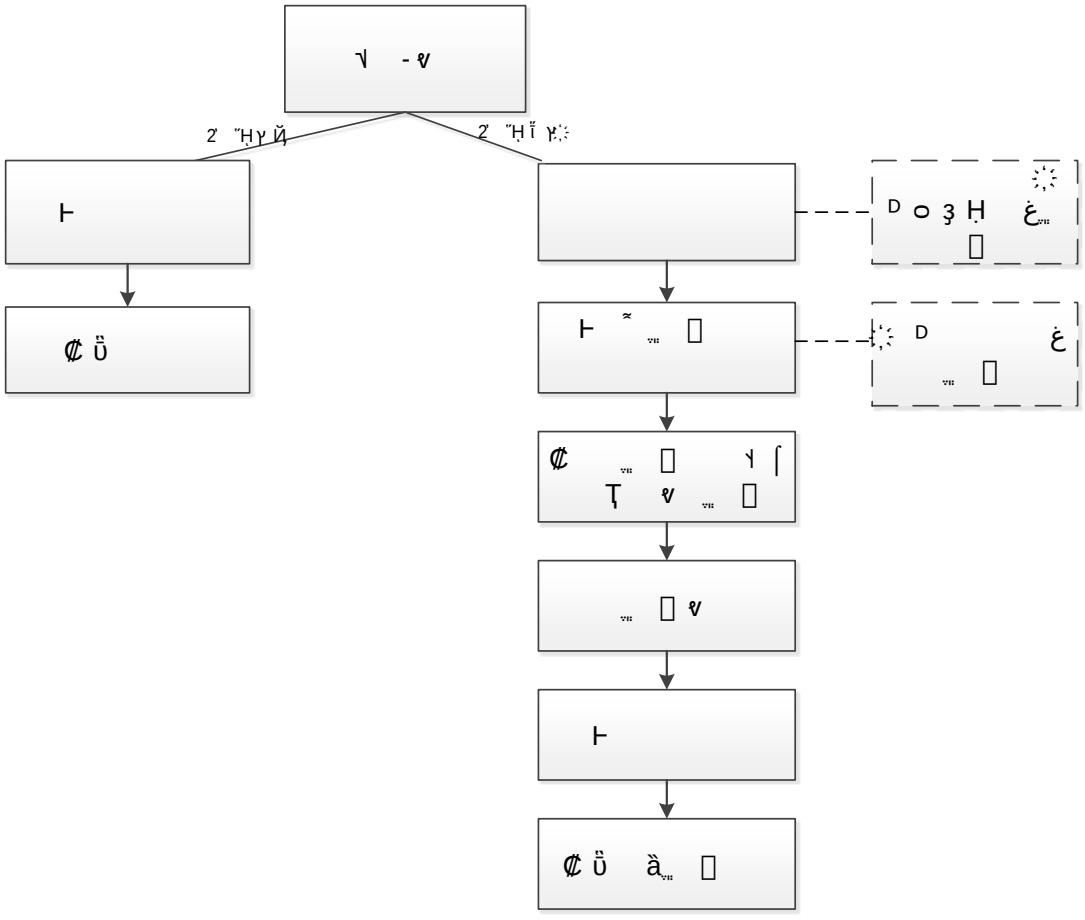

ˆ 2˜

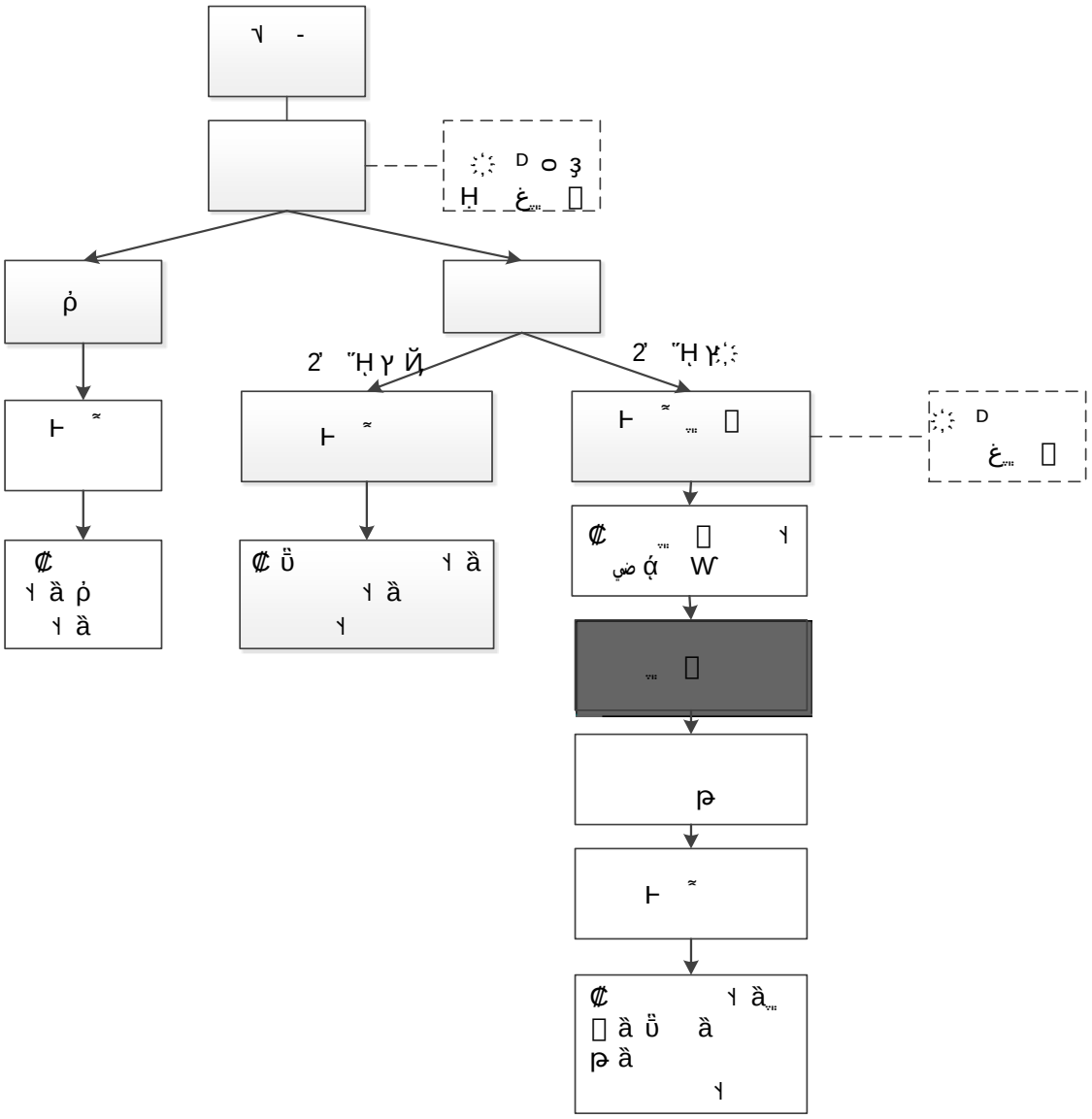

' ϒ β ضيجد Ώ ' ˘ Â

ˆ ' ïˆ ضي Ⱶ W`E Ⅰ' Ӣ Ғ ϒ Ⱡ Ӣ ˜

(2) . ∀ Ⱶυ

ˆ Ж˜ ʒ Ⴚ

1 ȁ Ԧ

ŵ h ˆ ɤ ƀ ɛ ʒ Ⴚ ˘ ˛˛ ƀ ⌠ 30%

Ŷ ʒ Ⴚ ˗ ˘ ˆ ɣ ƀ Ԧ ̈ ̣ ˘ ˛ Â ƀ ‰ ƀ 50 ˝Ḥ/˛ ’ ʒ Ⴚ ‰ ƀ 150 ˝Ḥ/˛ Â

ˆ 2˜ ʒ Ⴚ

ŵ ɤ’

Ḥ ľ Ⴚ ˜ Ⴛ ’

Ŷ ȕ Â